TOYOTA

HIGHLANDER

Gasoline-Electric

Hybrid Synergy Drive

HYBRID VEHICLE DISMANTLING MANUAL

MHU23/28 Series

Foreword

This guide was developed to educate and assist dismantlers in the safe handling of the Toyota Highlander gasoline-electric hybrid vehicle. Highlander dismantling procedures are similar to other Toyota vehicles with the exception of the high voltage electrical system. It is important to recognize and understand the high voltage electrical system features and specifications of the Toyota Highlander as they may not be familiar to dismantlers.

High voltage electricity powers an electric motor, generator, power steering, electric inverter compressor (for air conditioner) and inverter. All other conventional automotive electrical devices such as the headlights, radio, and gauges are powered from a separate 12-Volt battery. Numerous safeguards have been designed into the Highlander to help ensure the high voltage, approximately 288-Volt, Nickel Metal Hydride (NiMH) Hybrid Vehicle (HV) battery pack is kept safe and secure in an accident.

The NiMH HV battery pack contains sealed batteries that are similar to rechargeable batteries used in laptop computers, cell phones, and other consumer products. The electrolyte is absorbed in the cell plates and will not normally leak out even if the battery is cracked. In the unlikely event the electrolyte does leak, it can be easily neutralized with a dilute boric acid solution or vinegar.

High voltage cables, identifiable by orange insulation and connectors, are isolated from the metal chassis of the vehicle

Additional topics contained in the guide include:

- Toyota Highlander identification.
- Major hybrid component locations and descriptions.

By following the information in this guide, dismantlers will be able to handle the Highlander hybrid-electric vehicle as safely as the dismantling of a conventional gasoline engine automobile.

© 2005 Toyota Motor Corporation

All rights reserved. This book may not be reproduced or copied, in whole or in part, without the written permission of Toyota Motor Corporation

Table of Contents

ABOUT THE HIGHLANDER **1**

HIGHLANDER IDENTIFICATION **2**

Exterior 3
Interior 4
Engine Compartment 5

HYBRID COMPONENT LOCATIONS & DESCRIPTIONS **6**

Specifications 7

HYBRID SYNERGY DRIVE OPERATION **8**

HV Battery Pack 9
Components Powered by the HV Battery Pack 9
HV Battery Pack Recycling 10
Auxiliary Battery 10

HIGH VOLTAGE SAFETY **11**

High Voltage Safety System 11
Service Plug 12

PRECAUTION TO BE OBSERVED WHEN DISMANTLING THE VEHICLE **13**

Necessary items 13

SPILLAGE **14**

DISMANTLING A VEHICLE **15**

REMOVAL OF HV BATTERY **18**

HV battery removal 18
HV Battery Caution Label 26

About the Highlander

The Highlander (MHU23/28 series) is the first gasoline-electric hybrid vehicle for Toyota. The gasoline-electric hybrid system has been named *Hybrid Synergy Drive*. *Hybrid Synergy Drive* means that the vehicle contains a gasoline engine and an electric motor for power. Two energy sources are stored onboard the vehicle:

1. Gasoline stored in the fuel tank for the gasoline engine.
2. Electricity stored in a high voltage Hybrid Vehicle (HV) battery pack for the electric motor.

The result of combining these two power sources is improved fuel economy and reduced emissions. The gasoline engine also powers an electric generator to recharge the battery pack; unlike a pure all electric vehicle, the Highlander never needs to be recharged from an external electric power source.

Depending on the driving conditions one or both sources are used to power the vehicle. The following illustration demonstrates how the Highlander operates in various driving modes.

❶ On light acceleration at low speeds, the vehicle is powered by the electric motor. The gasoline engine is shut off.

❷ During normal driving, the vehicle is powered mainly by the gasoline engine. The gasoline engine is also used to recharge the battery pack.

❸ During full acceleration, such as climbing a hill, both the gasoline engine and the electric motor power the vehicle.

❹ During deceleration, such as braking, the vehicle regenerates the kinetic energy from the front wheels to produce electricity that recharges the battery pack.

❺ While the vehicle is stopped, the gasoline engine and electric motor are off, however, the vehicle remains on and operational.

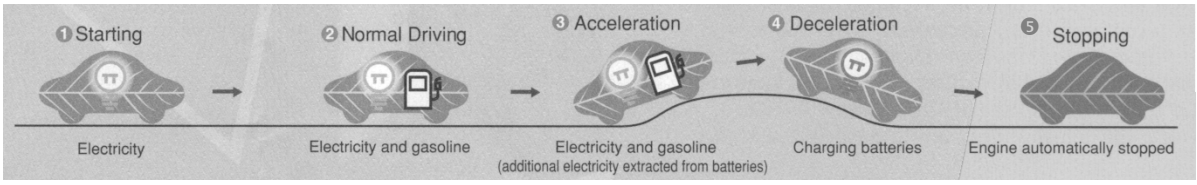

Highlander Identification

In appearance, the Highlander is nearly identical to the conventional, non-hybrid Toyota Highlander. The Highlander is a 5-door SUV. Exterior, interior, and engine compartment illustrations are provided to assist in identification.

The alphanumeric 17 character Vehicle Identification Number (VIN) is provided in the front windshield cowl, driver doorpost and passenger side frame.

Example VIN: JTEGW21A840020208 (2WD)
JTEHW21A850011201 (4WD)

An Highlander is identified by the first 6 alphanumeric characters;
JTEGW2/JTEDW2 (2WD) and JTEHW2/JTEEW2 (4WD).

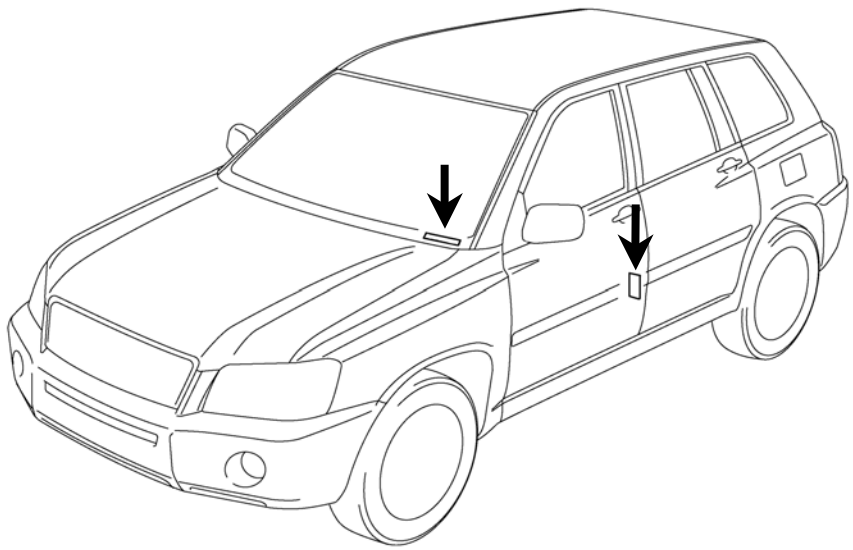

VIN Plate Locations

Exterior

❶ ***Hybrid Synergy Drive*** & ***Highlander*** logos on back door.

❷ Gasoline fuel filler door located on left side quarter panel.

❸ Toyota logo on the hood.

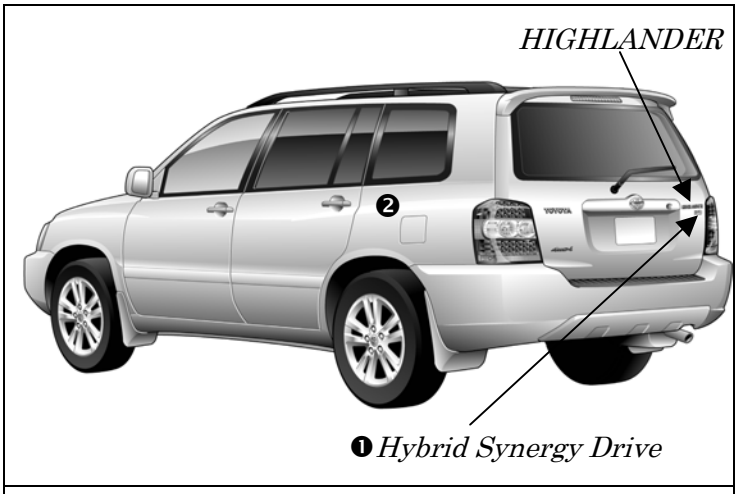

Exterior Rear & Left Side View

Exterior Left Side View

Exterior Front View

Highlander Identification (Continued)

Interior

❹ Instrument cluster (speedometer, fuel gauge, warning lights) located in the dash behind the steering wheel, is different than the one on the conventional, non-hybrid Highlander.

❺ In place of a tachometer, a power meter showing KW output is used.

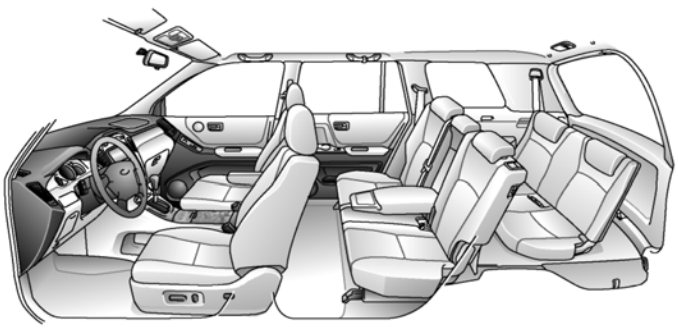

Interior View

Instrument Cluster & LCD Monitor

Engine Compartment

❻ 3.3-liter aluminum alloy gasoline engine.

❼ High voltage inverter/converter assembly with logo on the cover.

❽ Orange colored high voltage power cables.

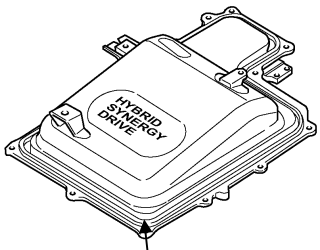

HYBRID SYNERGY DRIVE *Logo* on Inverter

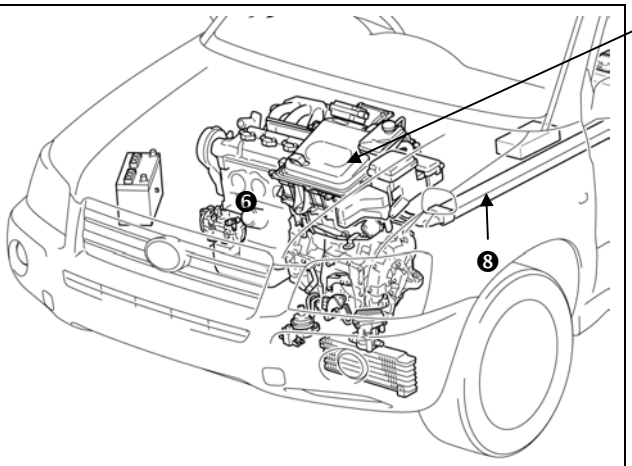

Engine Compartment

Hybrid Component Locations & Descriptions

Component	Location	Description
12-Volt Auxiliary Battery ❶	Engine Compartment	Lead-acid battery powers all low voltage electrical equipment except electric motor, generator, inverter/converter, A/C compressor, and electric power steering.
Hybrid Vehicle (HV) Battery Pack ❷	Cabin Area, Mounted to Cross Member and Under Rear Seat	288-Volt Nickel Metal Hydride (NiMH) battery pack consisting of 30 low voltage (9.6-volt) modules connected in series.
Power Cables ❸	Under Carriage and Engine Compartment	Orange and yellow colored power cables carry high voltage Direct Current (DC) between the HV battery pack and inverter/converter. Also carries 3-phase Alternating Current (AC) between inverter/converter, motor, generator, and A/C compressor.
Inverter/ Converter ❹	Engine Compartment	Boosts and inverts the high voltage electricity from the HV battery pack to 3-phase AC electricity that drives the electric motor. The inverter/converter also converts AC electricity from the electric generator and motor (regenerative braking) to DC that recharges the HV battery pack.
Gasoline Engine ❺	Engine Compartment	Provides two functions: 1) powers vehicle; 2) powers generator to recharge the HV battery pack. The engine is started and stopped under control of the vehicle computer.
Front Electric Motor ❻	Engine Compartment	3-phase high voltage AC permanent magnet electric motor contained in the front transaxle. Used to power the front wheels.
Electric Generator ❼	Engine Compartment	3-phase high voltage AC generator contained in the front transaxle. Used to recharge the HV battery pack.
A/C Compressor❽	Engine Compartment	3-phase high voltage AC electrically driven motor compressor.
EPS DC-DC Converter ❾	Underneath the cargo area by the spare tire	Converts 288Volts from the HV battery pack to 42Volts. Yellow-colored wires conduct the 42Volts power underneath the vehicle floor pan to the power steering rack via the EPS ECU, located in the engine compartment.
Fuel Tank and Fuel Lines ❿	Undercarriage, Driver Side	Fuel tank provides gasoline via a single fuel line to the engine. The fuel line is routed along driver side under the floor pan.
Rear Electric Motor (4WD Model Only) ♦	Rear Sub-Frame	3-phase high voltage AC permanent magnet electric motor contained in the rear transaxle used to power the rear wheels.

Specifications

Gasoline Engine:	208 hp, 3.3 liter Aluminum Alloy Engine
Electric Motor:	Front: 165hp, Permanent Magnet Motor
	Rear: 67hp, Permanent Magnet Motor (4WD Model Only)
Transmission:	Automatic Only
HV Battery:	288-Volt Sealed NiMH
Curb Weight:	North America: 4,068lbs (2WD)
	North America: 4,244Ibs (4WD)
Fuel Tank:	14.3 gals
Body Material:	Steel Panels

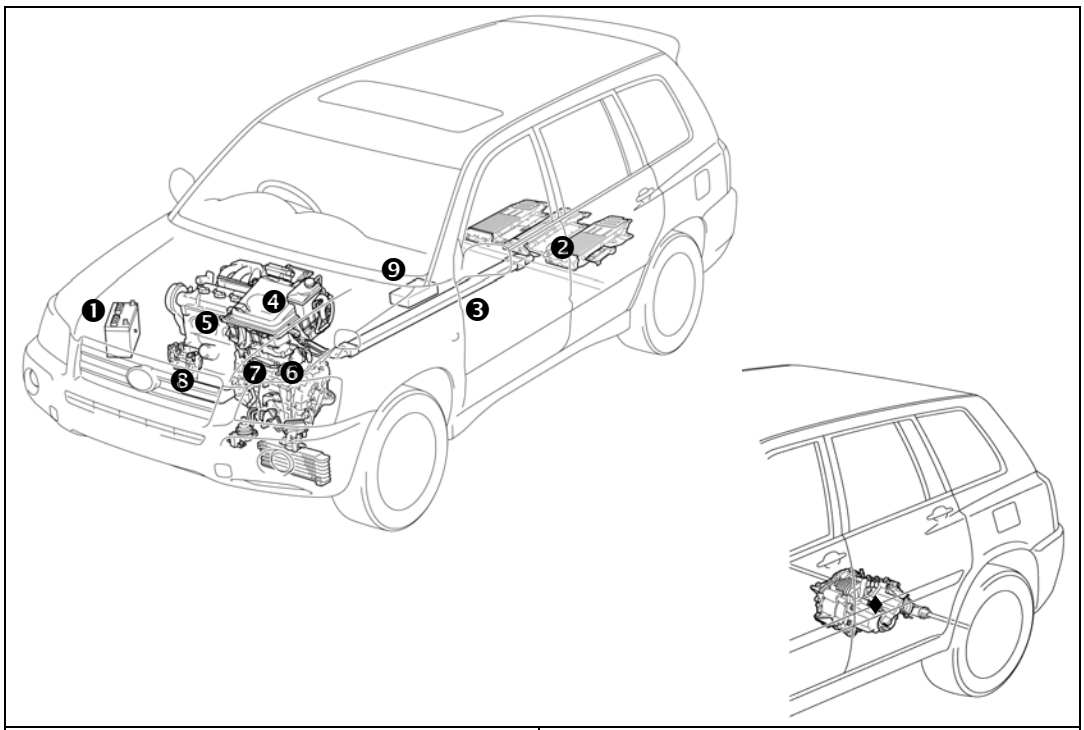

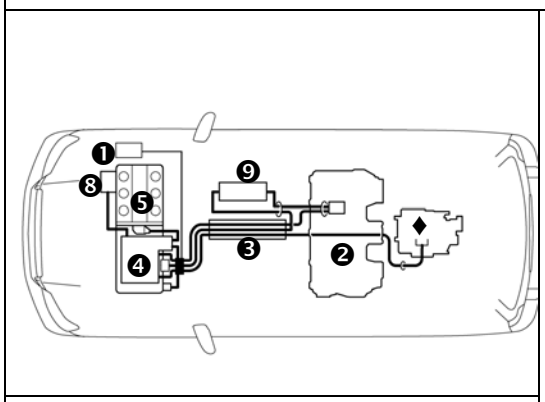

Power Cable

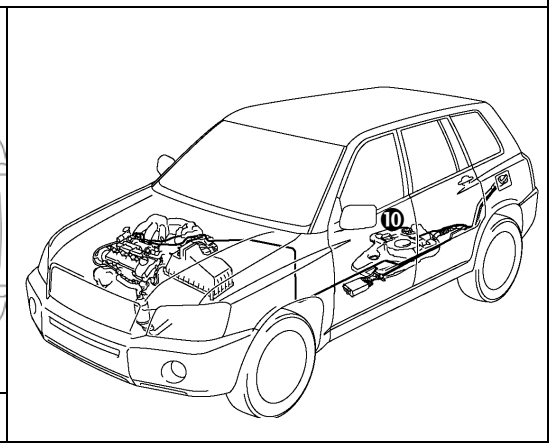

Hybrid Synergy Drive Operation

Once the **READY** indicator is illuminated in the instrument cluster, the vehicle may be driven. However, the gasoline engine does not idle like a typical automobile and will start and stop automatically. It is important to recognize and understand the **READY** indicator provided in the instrument cluster. When lit, it informs the driver that the vehicle is on and operational even though the gasoline engine may be off and the engine compartment is silent.

Vehicle Operation

- With the Highlander, the gasoline engine may stop and start at any time while the **READY** indicator is on.
- Never assume that the vehicle is shut off just because the engine is off. Always look for the **READY** indicator status. The vehicle is shut off when the **READY** indicator is off.
- The vehicle may be powered by:
  1. The electric motor only.
  2. The gasoline engine only.
  3. A combination of both the electric motor and the gasoline engine.
- The vehicle computer determines the mode in which the vehicle operates to improve fuel economy and reduce emissions. The driver cannot manually select the mode.

Instrument Cluster **READY** Indicator

Hybrid Vehicle (HV) Battery Pack and Auxiliary Battery

The Highlander contains a next generation high voltage, Hybrid Vehicle (HV) battery pack and a low voltage auxiliary battery. The HV battery pack contains non-spillable, sealed Nickel Metal Hydride (NiMH) battery modules and the auxiliary battery is a typical automotive lead-acid type.

HV Battery Pack

- The HV battery pack is enclosed in a metal case and is rigidly mounted to the cabin area floor pan cross member under the rear seat. The metal case is isolated from high voltage and concealed by a cover in the cabin area.

- The HV battery pack consists of 30 low voltage (9.6-Volt) NiMH battery modules connected in series to produce approximately 288-Volts. Each NiMH battery module is non-spillable and sealed in a metal case.

- The electrolyte used in the NiMH battery module is an alkaline of potassium and sodium hydroxide. The electrolyte is absorbed into the battery cell plates and will form a gel that will not normally leak, even in a collision.

- In the unlikely event the battery pack is overcharged, the modules vent gases directly outside the vehicle through a vent hose.

HV Battery Pack	
Battery pack voltage	288Volts
Number of NiMH battery modules in the pack	30
NiMH battery module voltage	9.6Volts
NiMH battery pack dimensions	25 x 43 x 7 in 63 x 108 x 18 cm
NiMH battery Pack weight	153 lbs 69 kg

Components Powered by the HV Battery Pack

- Front Electric Motor
- Inverter/Converter
- Electric Generator
- Electric Power Steering
- Rear Electric Motor (with 4WD)
- A/C Compressor
- Power Cables

HV Battery Pack Recycling

- The HV battery pack is recyclable. Contact your Toyota Distributor as mentioned on HV battery Caution Label (see the page 26) or the nearest Toyota dealer.

Auxiliary Battery

- The Highlander also contains a lead-acid 12-Volt battery. This 12-Volt auxiliary battery powers the vehicle electrical system similar to a conventional vehicle. As with other conventional vehicles, the auxiliary battery is grounded to the metal chassis of the vehicle.
- The auxiliary battery is located in engine compartment area.

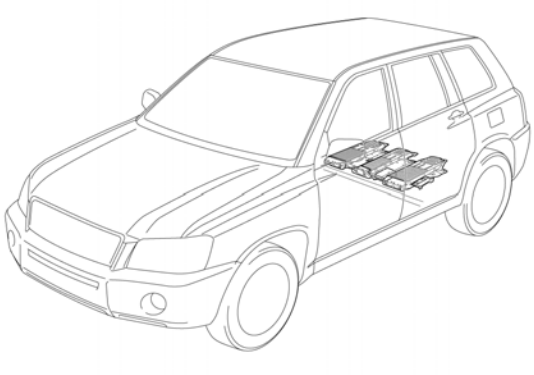	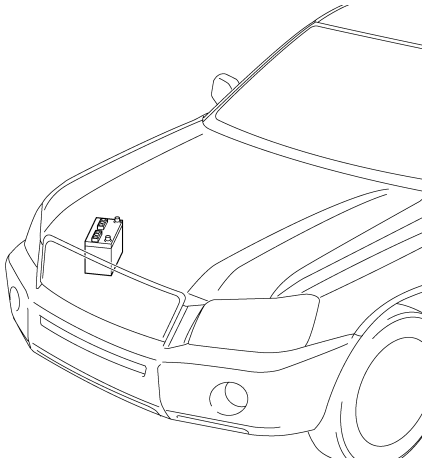
288-Volt HV Battery Pack	12-Volt Auxiliary Battery in Engine Compartment
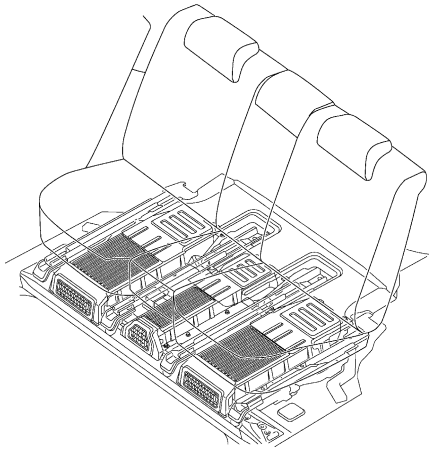	
HV Battery Pack Mounted in Cabin Area	

High Voltage Safety

The HV battery pack powers the high voltage electrical system with DC electricity. Positive and negative high voltage power cables are routed from the battery pack, under the vehicle floor pan, to the inverter/converter. The inverter/converter contains a circuit that boosts the HV battery voltage from 288 to 650-Volts DC. The inverter creates 3-phase AC to power the motors. A set of 3 power cables is routed from the inverter to each high voltage motor (electric motor, electric generator, A/C compressor, and optional 4WD rear motor). Occupants in the vehicle and emergency responders are separated from high voltage electricity by the following system:

High Voltage Safety System

- A high voltage fuse ❶ provides short circuit protection in the HV battery pack.

- Positive and negative high voltage power cables ❷ connected to the HV battery pack are controlled by 12-Volt normally open relays ❸. When the vehicle is shut off, the relays stop electricity flow from the HV battery pack.

> ⚠ **WARNING:**
>
> - *Power remains in the high voltage electrical system for 5 minutes after the HV battery pack is shut off.*
> - ***Never** cut, or open any orange high voltage power cables or high voltage components.*
> - *Make sure that the tester reading is 0 V before touching any high-voltage terminals which are not insulated.*

- Both positive and negative power cables ❷ are isolated from the metal chassis, so there is no possibility of shock by touching the metal chassis.

- A ground fault monitor ❹ continuously monitors for high voltage leakage to the metal chassis while the vehicle is running. If a malfunction is detected, the vehicle computer ❹ will illuminate the master warning light ⚠ in the instrument cluster and indicate "CHECK HYBRID SYSTEM" on the Multi-information Display.

- The HV battery pack relays will automatically open to stop electricity flow in a collision sufficient to activate the SRS.

Service Plug

- The high-voltage circuit is cut by removing service plug. (See page 15).

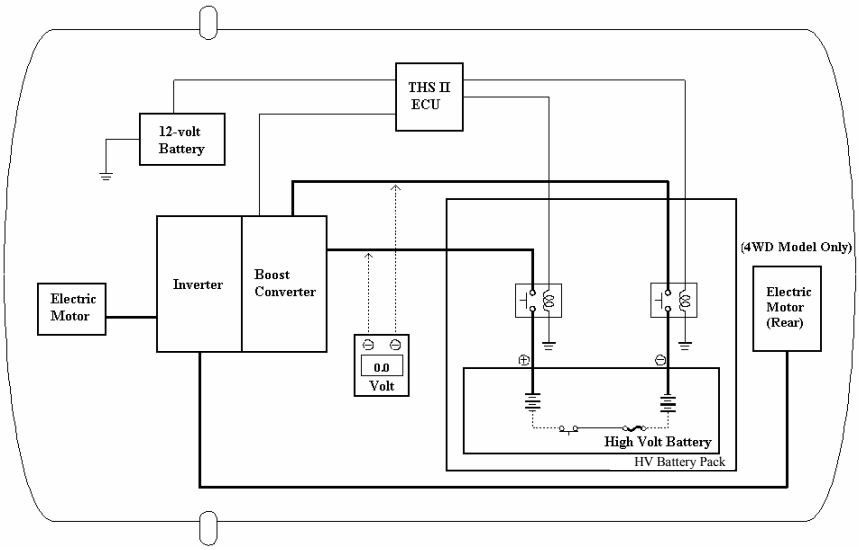

High Voltage Safety System – Vehicle Shut Off (**READY** off)

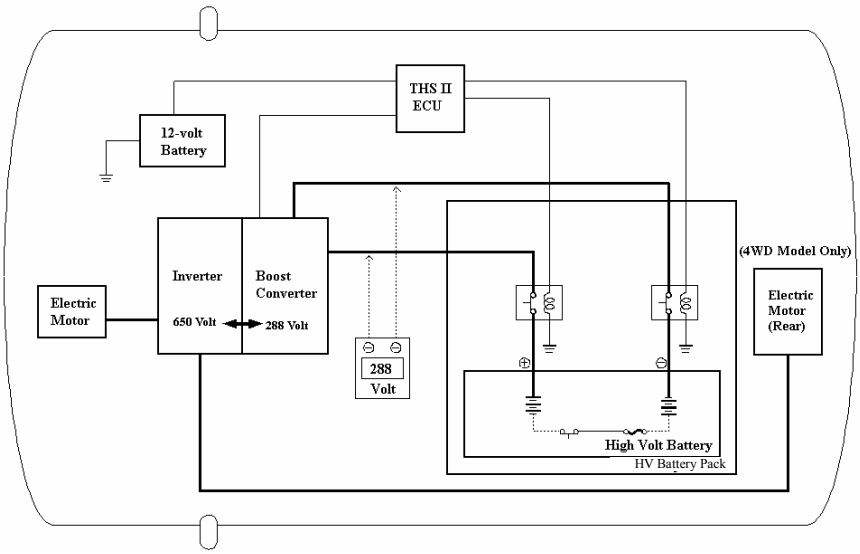

High Voltage Safety System – Vehicle On and Operational (**READY** on)

Precaution to be observed when dismantling the vehicle

WARNING:

- ***Never*** *assume that the Highlander is shut off simply because it is silent.*
- *Assure that* ***READY*** *indicator is off.*
- *After removing the service plug, wait 5* ***minutes*** *before touching any of the high-voltage connectors and terminals.*
- *Before dismantling the high-voltage system, take measures such as wearing insulated gloves and removing the service plug to prevent electrocution.*
- *If either of the disabling steps above cannot be performed, proceed with caution as there is no assurance that the high voltage electrical system, SRS, or fuel pump are disabled.*
- ***Never*** *cut, or open any orange high voltage power cables or high voltage components.*
- *Make sure that the tester reading is 0 V before touching any high-voltage terminals which are not insulated.*

Necessary items

- Protective clothing (insulated gloves, rubber gloves, safety goggles, and safety shoes).
- Vinyl tape for insulation
- Before wearing insulated the vehicle gloves, make sure that they are not cracked, ruptured, torn, or damaged in any other way. Do not wear wet insulated gloves.

Spillage

The Highlander contains the same common automotive fluids used in other Toyota vehicles, with the exception of NiMH electrolyte used in HV battery pack. The NiMH battery electrolyte is a caustic alkaline (pH 13.5) that causes damage to human tissues. The electrolyte, however, is absorbed in the cell plates and will not normally spill or leak out even if a battery module is cracked. A catastrophic crash that would breach both the metal battery pack case and the battery module would be a rare occurrence.

Similar to using baking soda to neutralize a lead-acid battery electrolyte spillage, a dilute boric acid solution or vinegar is used to neutralize the NiMH battery electrolyte spillage.

In an emergency, Toyota Material Safety Data Sheets (MSDS) may be requested.

- Handle NiMH Electrolyte Spills Using The Following Personal Protective Equipment (PPE):
    - Splash shield or safety goggles. Folding down helmet shields is not acceptable for alkaline spillage.
    - Rubber, latex or Nitrile gloves.
    - Apron suitable for alkaline.
    - Rubber boots.

- Neutralize NiMH Electrolyte
    - Use a boric acid solution or vinegar.
    - Boric acid solution - 800 grams boric acid to 20 liters water or 5.5 ounces boric acid to 1 gallon of water.

Dismantling a vehicle

WARNING:

- ***Never*** *assume that the Highlander is shut off simply because it is silent.*
- *Assure that* ***READY*** *indicator is off.*
- *After removing the service plug, wait* ***5 minutes*** *before touching any of the high-voltage connectors and terminals.*
- *Before dismantling the high-voltage system, take measures such as wearing insulated gloves and removing the service plug to prevent electrocution.*
- *If either of the disabling steps above cannot be performed, proceed with caution as there is no assurance that the high voltage electrical system, SRS, or fuel pump are disabled.*
- ***Never*** *cut, or open any orange high voltage power cables or high voltage components.*
- *Make sure that the tester reading is 0 V before touching any high-voltage terminals which are not insulated.*

1. Shut off ignition. Then disconnect the negative (-) terminal of the auxiliary battery and remove the service plug.
   a) Remove the 2 clips and door scuff plate LH (w/ Rear No. 2 seat).
   b) Remove the 2 clips, then open the battery service hole cover.
   c) Wear insulated gloves, and pull up the release handle of the service plug grip. Then, remove the service plug grip.
   d) Apply electrical tape to the socket of the service plug grip to insulate it.

w/ Rear No. 2 seat

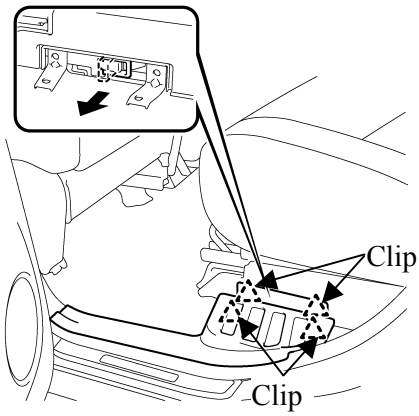

w/o Rear No. 2 seat

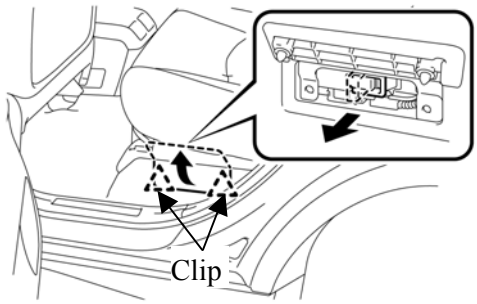

2. Carry the removed service plug in your pocket to prevent other staff from reinstalling it while you are dismantling the vehicle.
3. Use the CAUTION: HIGH VOLTAGE. DO NOT TOUCH DURING OPERATION sign to notify other staff that a high-voltage system is being dismantled (see the page 17).
4. If the service plug cannot be removed due to damage to the rear portion of the vehicle, remove the IGCT No. 4 fuse (10A: Red).

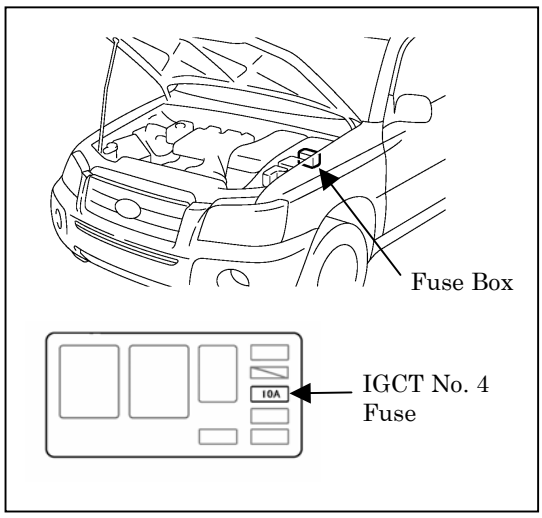

5. After disconnecting or exposing a high-voltage connector or terminal, insulate it immediately using insulating tape. Before touching a bare high-voltage terminal, wear insulated gloves.

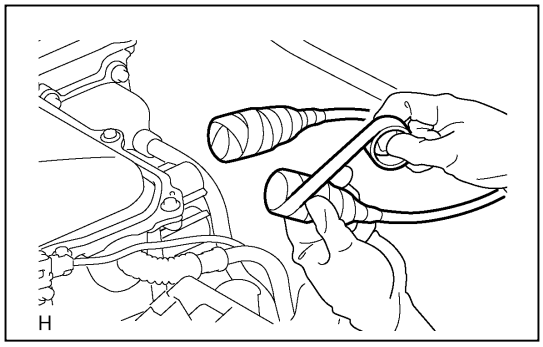

6. Check the HV battery and nearby area for leakage. If you find any liquid, it could be leakage from the strong alkaline electrolyte. Wear rubber gloves and goggles and neutralize the liquid using the saturated boric acid solution or vinegar. Then wipe up the liquid using waste rags etc.
   a) If the electrolyte gets on your skin, wash the skin immediately using the saturated boric acid solution or a large amount of water. If the electrolyte gets on an article of clothing, take it off immediately.
   b) If the electrolyte comes into contact with your eyes, call out loudly for help. Do not rub your eyes but wash them with a dilute boric acid solution or a large amount of water and seek medical care.
7. Remove the parts by following the procedures which are similar to the Toyota vehicles with exception of HV battery. As for the removal of HV battery, please refer to following pages.

CAUTION:
HIGH VOLTAGE. DO
NOT TOUCH DURING
OPERATION

Person in charge:_____

CAUTION:
HIGH VOLTAGE. DO
NOT TOUCH DURING
OPERATION

Person in charge:_____

Copy this page and put it after folding on the roof of the vehicle in service.

Removal of HV battery

HV battery removal

WARNING:

- ***Never*** *assume that the Highlander is shut off simply because it is silent.*
- *Assure that* ***READY*** *indicator is off.*
- *After removing the service plug, wait* ***5 minutes*** *before touching any of the high-voltage connectors and terminals.*
- *Before dismantling the high-voltage system, take measures such as wearing insulated gloves and removing the service plug to prevent electrocution.*
- *If either of the disabling steps above cannot be performed, proceed with caution as there is no assurance that the high voltage electrical system, SRS, or fuel pump are disabled.*
- ***Never*** *cut, or open any orange high voltage power cables or high voltage components.*
- *Make sure that the tester reading is 0 V before touching any high-voltage terminals which are not insulated.*

1. Disconnect the cable from the auxiliary battery negative terminal.

2. Remove the service plug grip.
   a) Remove the 2 clips and door scuff plate LH (w/ Rear No. 2 seat).
   b) Remove the 2 clips, then open the battery service hole cover.
   c) Wear insulated gloves, and pull up the release handle the service plug grip. Then, remove the service plug grip.
   d) Apply electrical tape to the socket of the service plug grip to insulate it.

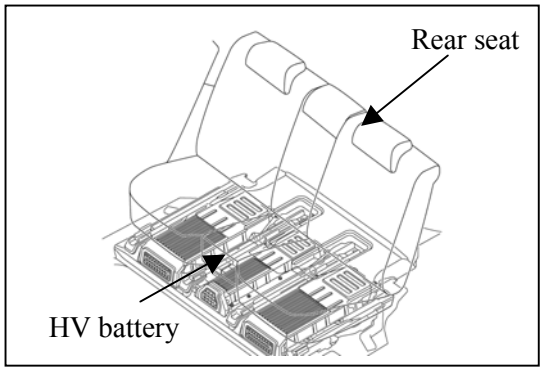

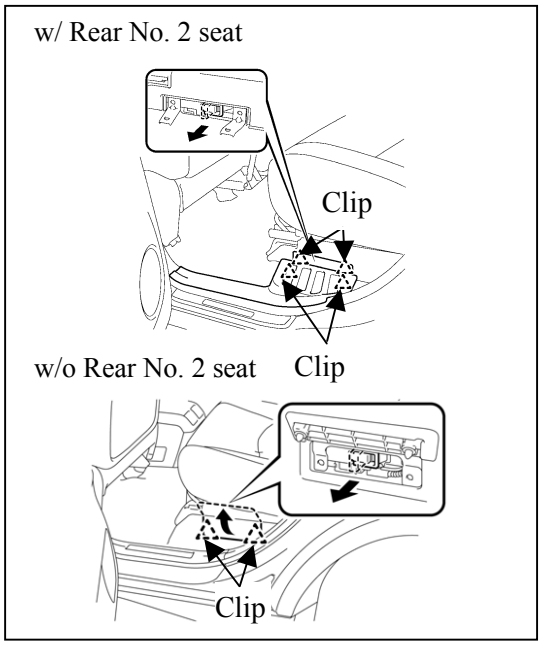

3. Remove the rear seat assemblies NO. 1 LH and RH (w/ Rear No. 2 seat).
   ① Remove the reclining hinge cover LH.
   ② Remove the 4 rear seat track covers.
   ③ Remove the 4 rear seat track bracket covers.
   ④ Remove the 4 bolts on the rear side of the seat.
   ⑤ Remove the 4 bolts on the front side of the seat.
   ⑥ Remove the rear seat assemblies LH and RH.

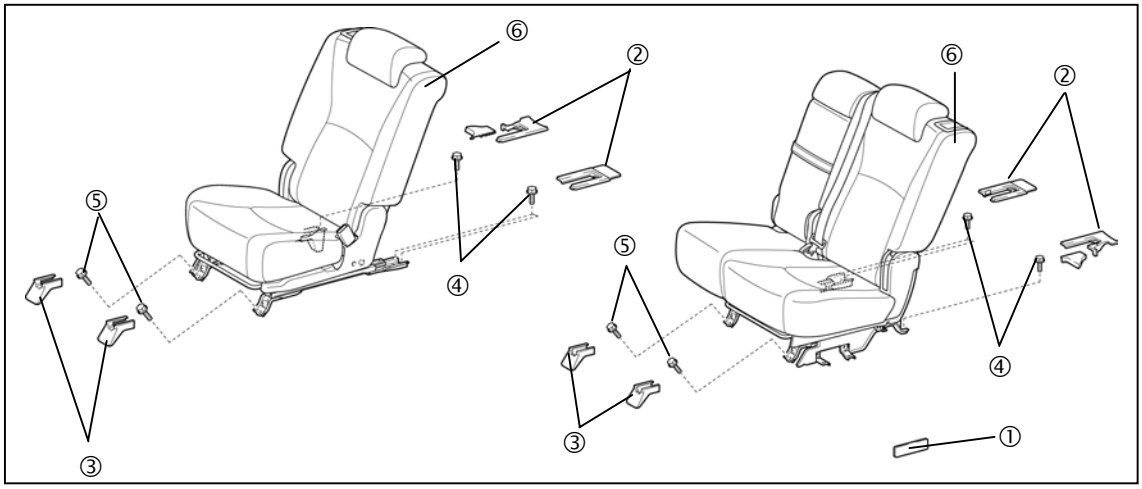

Remove the rear seat assemblies NO. 2 (w/ Rear No. 2 seat)

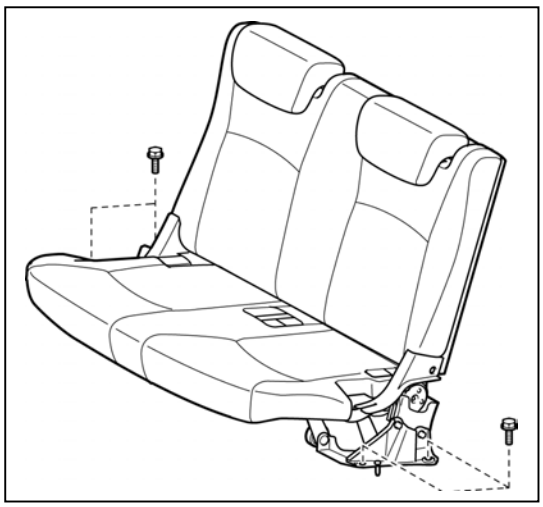

4. Remove the rear seat assemblies NO. 1 LH and RH (w/o Rear No. 2 seat).
   ① Move the rear seats LH and RH to the rear most position.
   ② Remove the 4 rear seat track bracket covers.
   ③ Remove the 4 bolts on the front side of the seat.
   ④ Fold down the rear seatbacks LH and RH.
   ⑤ Remove the 8 clips and turn back the rear seatback board carpet.
   ⑥ Remove the 2 bolts and 2 hold seat stopper bands.
   ⑦ Remove the 6 bolts on the rear side of the seat.
   ⑧ Remove the rear seat assemblies LH and RH.

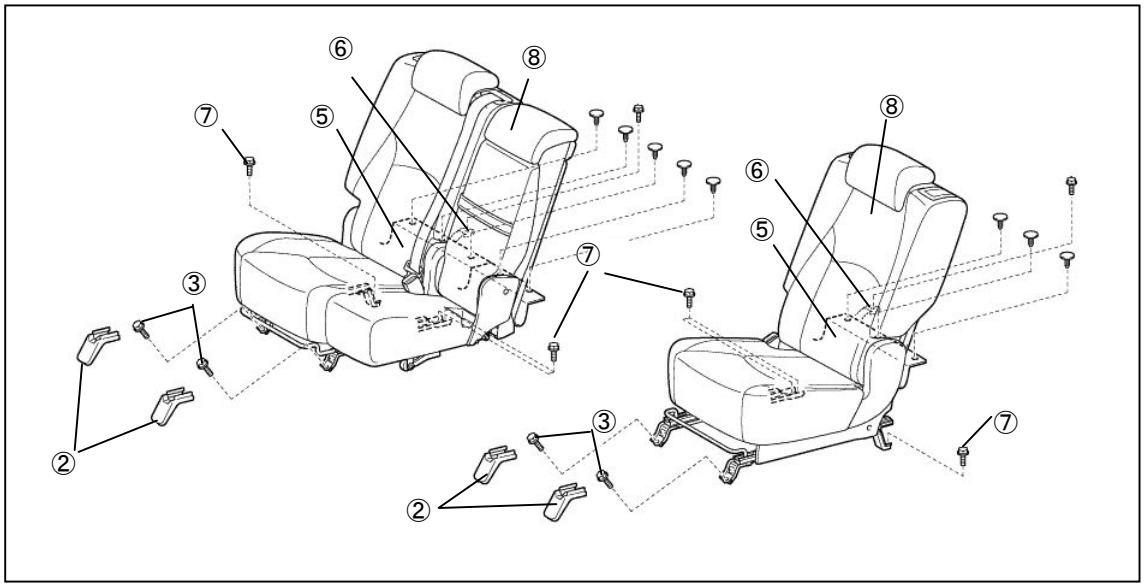

5. Remove the deck side trims LH and RH
   ① Remove the tonneau cover.
   ② Remove the deck board sub-assembly.
   ③ Remove the deck board sub-assembly NO. 2.
   ④ Remove the deck board sub-assembly NO. 3.
   ⑤ Remove the rear floor finish plate.
   ⑥ Remove the deck floor box front (w/o Rear No. 2 seat)
   ⑦ Remove the rear seat reclining covers NO. 2 LH and RH
   ⑧ Remove jack carrier assembly.
   ⑨ Remove the deck side trim boxes LH and RH.
   ⑩ Remove the door scuff plates LH and RH.
   ⑪ Remove the deck side trim covers LH and RH.
   ⑫ Remove the rope hook.
   ⑬ Remove the seat belts outer LH and RH.
   ⑭ Remove the deck side trims LH and RH.

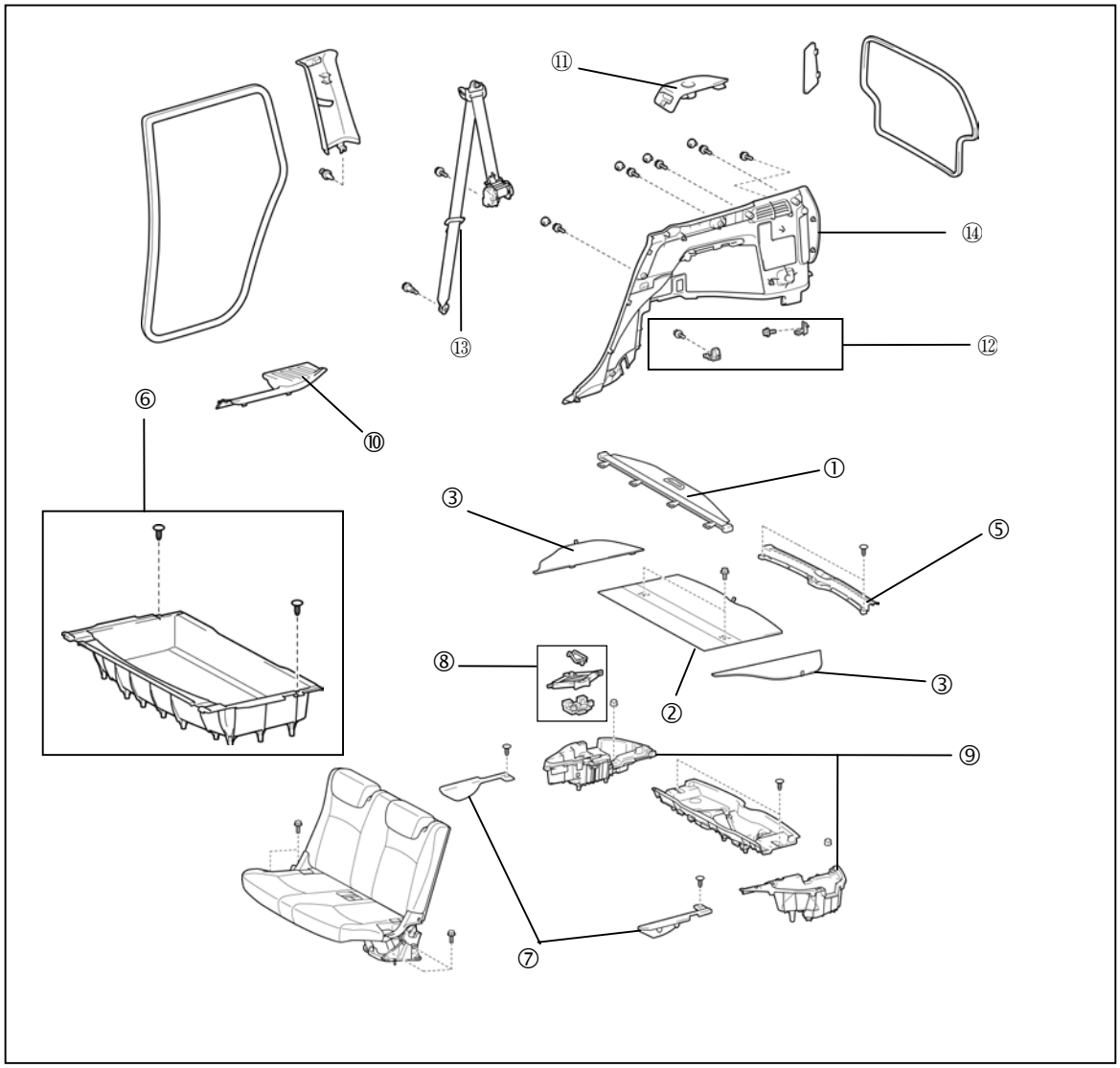

6. Remove the air intake cover (LH, RH and CENTER)
   a) Using a screwdriver with its tip taped, remove the 2 hole covers from each air intake cover.

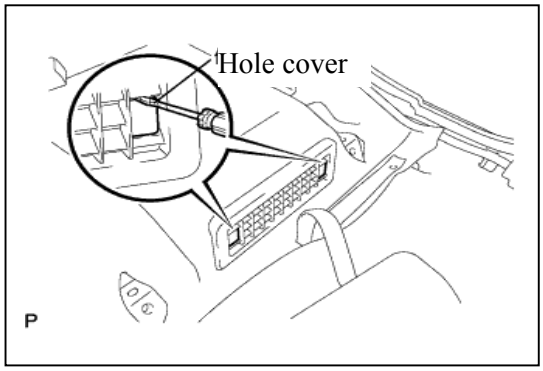

   b) Remove the 2 screws from each air intake cover. Release the 2 claws to remove the air intake covers LH, RH, and CENTER.

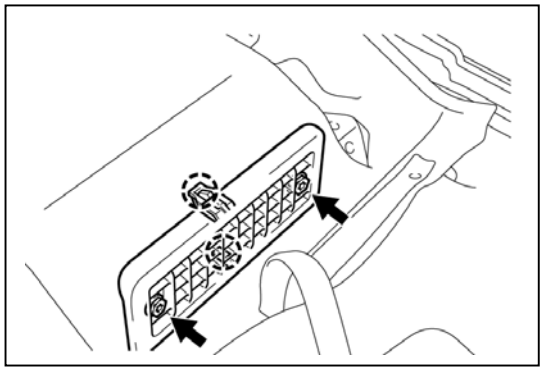

7. Remove floor boards NO. 1 NO. 2 and NO. 3 (w/ Rear seat No. 2 seat)
   a) Remove floor board NO. 1.

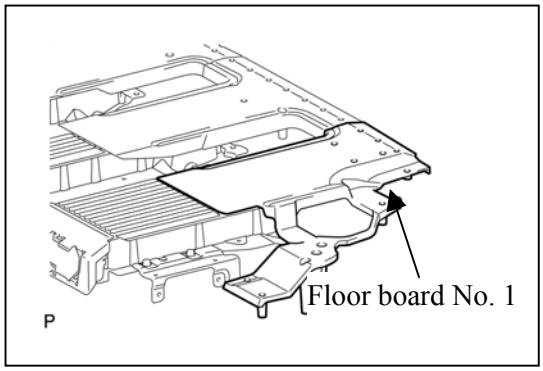

   b) Remove floor board NO. 2.
   c) Remove floor board NO. 3.

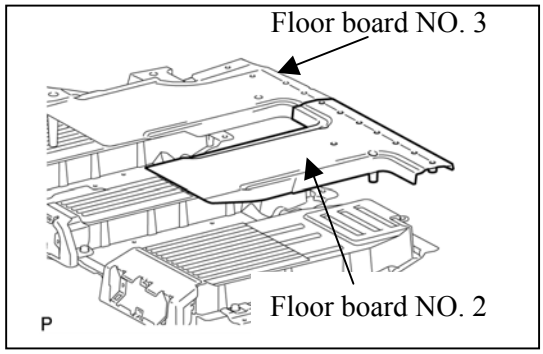

8. Remove the bolt and rear seat belt assembly inner NO. 1.

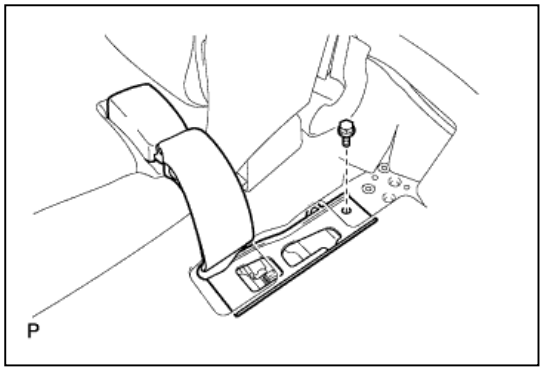

9. Remove the 2 bolts and battery carrier bracket. (w/o Rear No. 2 seat)

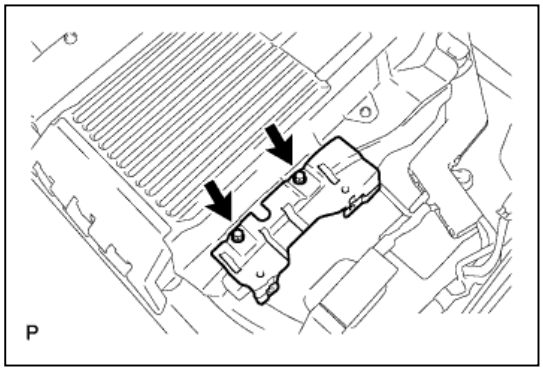

10. Remove the 2 bolts on each battery carrier duct and remove the battery carrier ducts LH, RH, and CENTER.

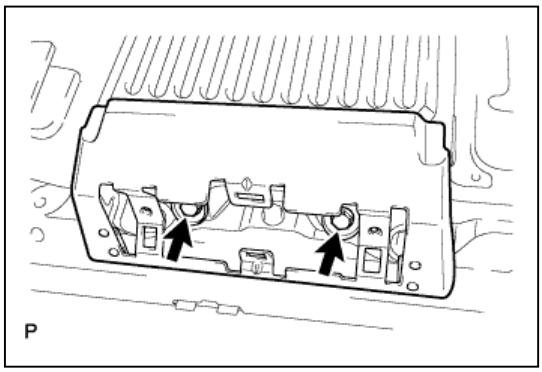

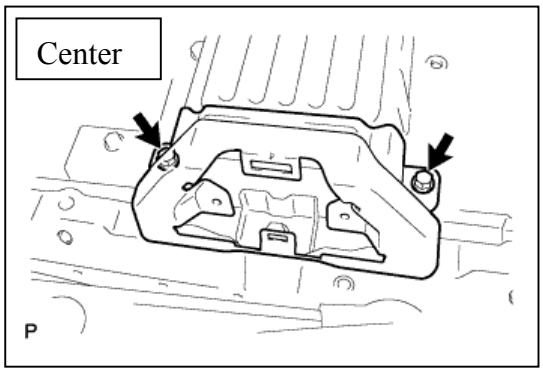

11. Remove the HV battery service hole cover.
    a) Release the 2 joints shown in the illustration, then remove the rear seat cushion.
    b) Remove the 2 bolts and battery service hole cover.

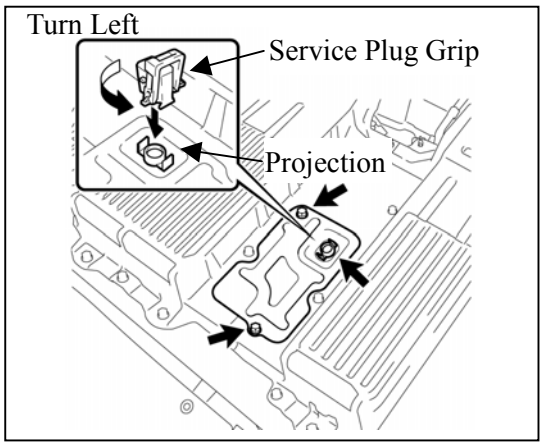

12. Remove the 3 frame wires.
    a) Remove the bolt and disconnect the connector. Remove frame wire No. 3.
    b) Remove the 2 nuts to remove the 2 frame wires from the SMR.

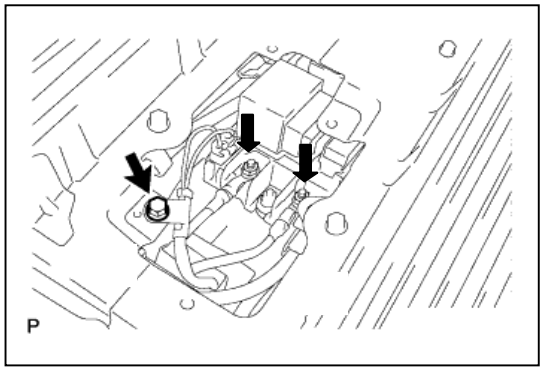

13. Disconnect the wires from the battery cooling blower, battery voltage sensor, and HV battery plug.

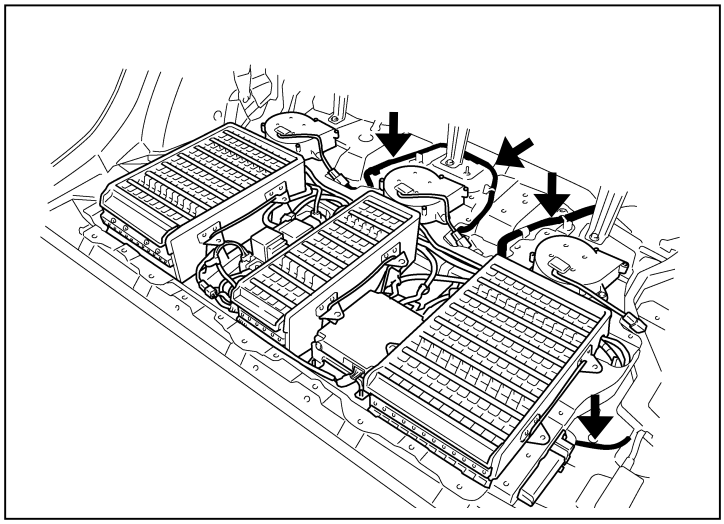

14. Remove the 11 HV battery attachment bolts.
15. Attach loop clutches or similar devices to the holes of the HV battery to connect the steel cables as shown in the illustration (load capacity: more than 70 kg).

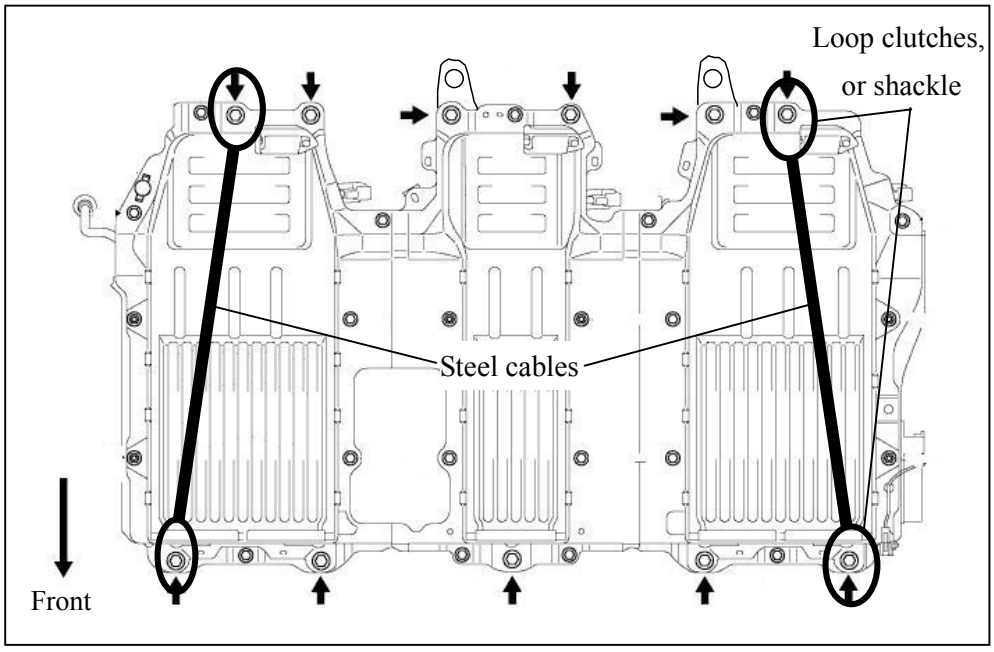

16. Pry either of the rear doors by operating the forklift to secure an opening for taking out the battery.

17. Insert the fork into the cabin to hang the HV battery unit. While maintaining clearance between the battery unit and the vehicle interior, take out the battery unit from the vehicle.

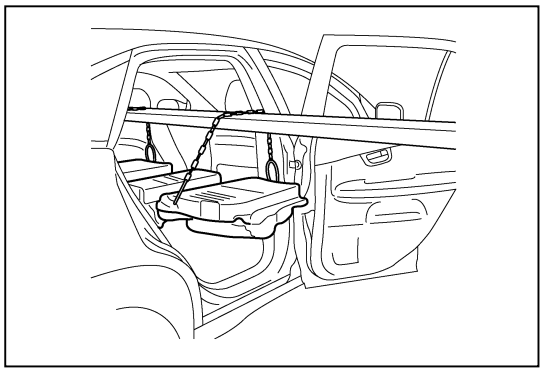

Caution

Set a stopper on the end of the fork to prevent the battery unit from sliding down.

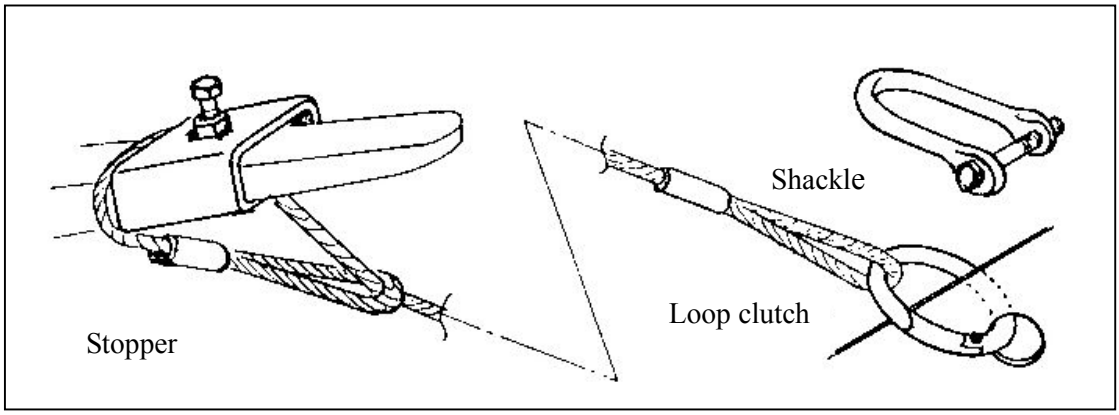

18. HV battery pack is recyclable. Contact your Toyota distributor as mentioned on HV Battery Caution Label or the nearest Toyota Dealer. (See the next page).

HV Battery Caution Label

1. For U.S.A.

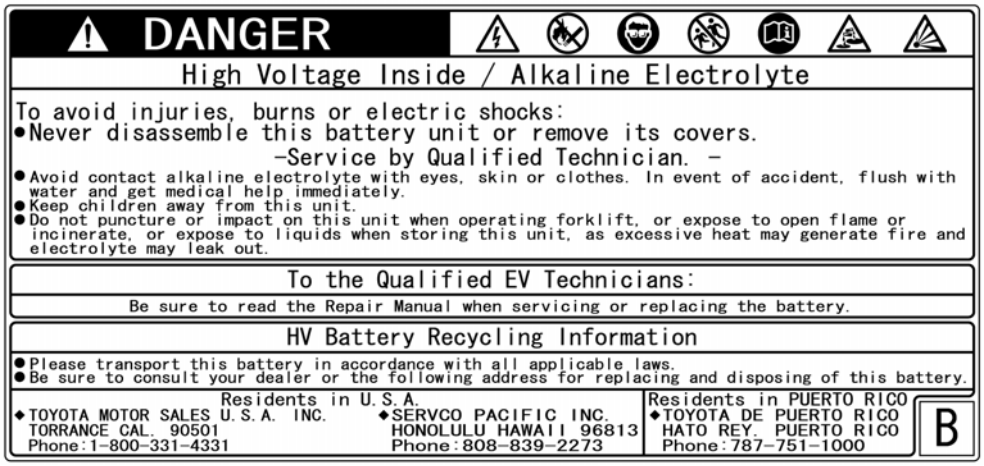

DANGER

High Voltage Inside / Alkaline Electrolyte

To avoid injuries, burns or electric shocks:
- Never disassemble this battery unit or remove its covers.
  -Service by Qualified Technician. -
- Avoid contact alkaline electrolyte with eyes, skin or clothes. In event of accident, flush with water and get medical help immediately.
- Keep children away from this unit.
- Do not puncture or impact on this unit when operating forklift, or expose to open flame or incinerate, or expose to liquids when storing this unit, as excessive heat may generate fire and electrolyte may leak out.

To the Qualified EV Technicians:

Be sure to read the Repair Manual when servicing or replacing the battery.

HV Battery Recycling Information

- Please transport this battery in accordance with all applicable laws.
- Be sure to consult your dealer or the following address for replacing and disposing of this battery.

Residents in U.S.A.
◆TOYOTA MOTOR SALES U.S.A. INC.
TORRANCE CAL. 90501
Phone:1-800-331-4331

◆SERVCO PACIFIC INC.
HONOLULU HAWAII 96813
Phone:808-839-2273

Residents in PUERTO RICO
◆TOYOTA DE PUERTO RICO
HATO REY. PUERTO RICO
Phone:787-751-1000

B

2. For CANADA

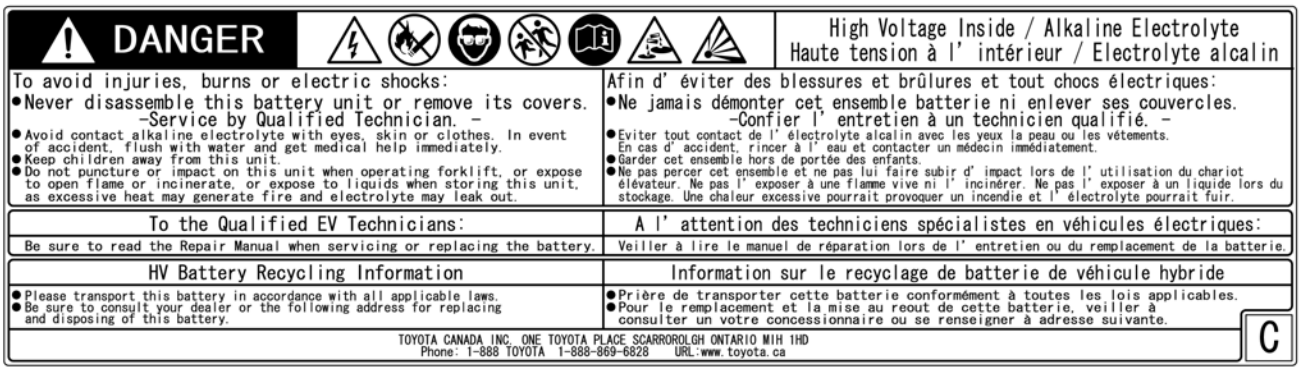

DANGER

High Voltage Inside / Alkaline Electrolyte
Haute tension à l' intérieur / Electrolyte alcalin

To avoid injuries, burns or electric shocks:
- Never disassemble this battery unit or remove its covers.
  -Service by Qualified Technician. -
- Avoid contact alkaline electrolyte with eyes, skin or clothes. In event of accident, flush with water and get medical help immediately.
- Keep children away from this unit.
- Do not puncture or impact on this unit when operating forklift, or expose to open flame or incinerate, or expose to liquids when storing this unit, as excessive heat may generate fire and electrolyte may leak out.

Afin d' éviter des blessures et brûlures et tout chocs électriques:
- Ne jamais démonter cet ensemble batterie ni enlever ses couvercles.
  -Confier l' entretien à un technicien qualifié. -
- Eviter tout contact de l' électrolyte alcalin avec les yeux la peau ou les vêtements. En cas d' accident, rincer à l' eau et contacter un médecin immédiatement.
- Garder cet ensemble hors de portée des enfants.
- Ne pas percer cet ensemble et ne pas lui faire subir d' impact lors de l' utilisation du chariot élévateur. Ne pas l' exposer à une flamme vive ni l' incinérer. Ne pas l' exposer à un liquide lors du stockage. Une chaleur excessive pourrait provoquer un incendie et l' électrolyte pourrait fuir.

To the Qualified EV Technicians:

Be sure to read the Repair Manual when servicing or replacing the battery.

A l' attention des techniciens spécialistes en véhicules électriques:

Veiller à lire le manuel de réparation lors de l' entretien ou du remplacement de la batterie.

HV Battery Recycling Information

- Please transport this battery in accordance with all applicable laws.
- Be sure to consult your dealer or the following address for replacing and disposing of this battery.

Information sur le recyclage de batterie de véhicule hybride

- Prière de transporter cette batterie conformément à toutes les lois applicables.
- Pour le remplacement et la mise au reout de cette batterie, veiller à consulter un votre concessionnaire ou se renseigner à adresse suivante.

TOYOTA CANADA INC. ONE TOYOTA PLACE SCARROROLGH ONTARIO M1H 1HD
Phone: 1-888 TOYOTA 1-888-869-6828 URL:www.toyota.ca

C